Guy D. R. Sanders

23

RECENT DEVELOPMENTS IN THE CHRONOLOGY OF BYZANTINE CORINTH

Byzantine studies once relied almost exclusively on churches, art, and archives to recreate a Constantinopolicentric, macroeconomic, and fine art–oriented picture of the secular and religious elite in the Eastern Roman Empire between 330 and 1463.[1] Today a growing number of scholars make use of the same monumental resources as well as such commonplace objects as household ceramics and bones to describe an altogether less genteel Byzantine world,[2] one in which the Empire's majority, its lowest social echelons, "delved and span."[3] While the highest echelons of society commissioned art and literature of considerable beauty, the average Corinthian left a legacy of detritus. By the time of the medieval city's demise in ca. 1320 some four meters of deposits, representing about four hundred years of continuous occupation, overlay the paving stones of the Roman Forum.

Sixty years of careful excavation, study, and publication have raised Corinth to an elevated place in the esteem of medieval archaeologists working in countries bordering the Mediterranean. The archaeological record, as published, has served as the basis for urban, ceramic, glass, and numismatic studies, whether generated in the library, in excavation, or through archaeological survey. The record, however, is flawed and requires upgrading. Elsewhere in this volume Williams discusses new developments in our understanding of the material in the top meter of these deposits. His overview of the period of the *Frankokrateia* is complemented by MacKay's pottery discussion and Barnes' study of the evidence for diet, labor, trauma, and disease preserved in the mortal remains of the dead. The present article endeavors to introduce their subject by reviewing aspects of the three meters of strata below the Frankish. My chosen subject, chronology, may be considered an old-fashioned one, but much still remains to be resolved before we can progress to more stimulating questions; until we know when, discussions of where, why, and how are inaccurate, largely irrelevant, and abstract scholarly exercises.

Field archaeologists, whether engaged in survey or in excavation, cannot afford to remain ignorant of their ceramic finds for very long. For fifty-five years we have relied heavily on *Corinth* XI, the Morgan volume on the glazed Byzantine pottery; although much of his work retains its value, it is by no means infallible. Morgan dated his earliest material using the accepted historical formulae of the time; these were later outlined by Scranton in *Corinth* XVI and I summarize them here.[4] After catastrophes, administrative collapse, and barbarian invasions in the 6th century Corinth was effectively deserted until the early 9th century. Upon reintegration into the Eastern Roman Empire the city found peace and prosperity until 1147, when Roger of Sicily permanently removed the best artisans and much of the city's accumulated wealth.[5] For Morgan the earliest post-Roman strata and the pottery therein were therefore early 9th century in date. For later material Morgan used coins, the pitfalls of which he was apparently unaware. Three examples will serve to illustrate the problem.

First, Morgan himself excavated a pottery deposit, found dumped within a rock cutting, that contained Constantinopolitan imports and local chafing dishes.[6]

1. I thank Charles K. Williams, Nancy Bookidis, Kathleen Slane, Orestes Zervos, Hugo Blake, and Leslie Brubaker for their advice, help, and wisdom.

2. Publications such as Bakirtzis *1989, Bouras *1981 and *1983, Bryer *1986a, Harvey *1989, Laiou-Thomadakis *1977, Lefort *1993, Oikonomides *1990, and Williams, Barnes, and Snyder 1997 can now be found on library shelves alongside the unapologetically magnificent Evans and Wixom *1997.

3. "When Adam delved and Eve Span, who was then the gentleman?" cited from John Ball's sermon at the outbreak of the Peasants' Revolt in 1381.

4. *Corinth* XVI, pp. 6–8, 27–28, 34–36, 50–52, 84–86.

5. Davidson 1940, p. 324.

6. "Pit at N–O:21–23," immediately northeast of the South Bath: see *Corinth* XVI, pp. 70–71, pl. 10:1. This material, saved as lot 1937-36, was actually not fill from a pit but a thick deposit of black ashy earth spread over and within the cutting. It was excavated sporadically over the course of two months. Some fifty pots and three fragmentary glass goblets were inventoried; a tray of uninventoried context pottery was also saved. To judge from the comments in the notebooks, the material from the upper parts of the dump joined with that from the lower parts.

MacKay (1967, p. 291) was misled into dating many of the plain wares from the same context considerably earlier than they indeed are: "nos. 92–94 were found in a pit that contained no coins, but had several pieces of glazed ware. Among the glazed pottery was Morgan no. 3, a Brown Glazed chafing dish, of the earliest type, which Morgan dates to the 9th and 10th centuries." MacKay dated her stewpots to the 10th century, possibly the first half.

He used six of the pots as examples of his 9th- and 10th-century types,[7] reasoning that the closest parallels for the material elsewhere on the site generally came from the lowest, therefore earliest, Byzantine strata. However, a later 11th century date for this deposit is assured by the presence of an Anonymous Class A follis (969–1034) within the fill and an Anonymous Class D follis (1050–1060) at the bottom of the cutting ten centimeters above bedrock.[8] Second, a Slip-Painted Ware dish (similar to Fig. 23.2:3) was found with 62 coins, including 18 then identified as issues of Michael VI and 13 thought to be of Alexius I (1081–1118). The fact that Morgan frequently dated pottery by the commonest and not the latest associated coins is demonstrated by the annotation "Best bet Michael VI" (in other words 1056–1057), entered in the 1936 field inventory book in his handwriting alongside the entry for the dish. It actually dates to the end of the 11th century, and the latest coins can now be identified as an Anonymous Class J follis (1080–1085) and a signed follis of Nicephorus III (1078–1081).[9] Finally, a Green and Brown Painted Ware cup (similar in decoration to Fig. 23.2:5)[10] was found within a tomb with ten Anonymous Class A folles. Despite ample evidence of repeated use of Byzantine tombs over long periods, Morgan dated the cup to the late 10th century, that is, contemporary with the coins, which, at the time, were identified as issues of John I Tzimisces (969–976). The cup and all the pottery that Morgan relates to it are, in fact, very late 11th to early 12th century.

Much has happened in the study of Byzantine numismatics since Morgan, Finley, and Scranton did their research, particularly the partial unmasking of the Anonymous Folles. These are a series of large copper coins devoid of secular identification with only an image of Christ on the obverse and a formulaic inscription on the reverse. The series was initiated by John I Tzimisces, probably in 970,[11] and continued until the Alexian reform of 1092. From the reign of Constantine IX (1042–1055) onward signed folles were also minted. Thus for 120 years most of the smallest denomination of Byzantine coins could be distinguished only by size, weight, overstrikes, and markings; for the last thirty of these years only a comparatively small proportion were signed. Exhaustive analysis of the overstrikes, published by Thompson in 1954, revealed that many anonymous folles had been attributed to emperors to whom they could not belong.[12] Her new scheme demonstrated, for example, that almost 30% of the coins attributed to Alexius I in Corinth publications actually predated his accession by a decade.

The history of the relevant scholarship to 1982 has been summarized by Grierson, who has also presented significant corrections and improvements.[13] Metcalf defined nine groups of Class A folles divided by size, weight, ornament, paleography, and iconographic style and attributed one group to a central Greek mint; he identified two groups as late varieties.[14] Grierson, however, maintained an early date for Class A1 but rejected both suggestions for a Greek mint and reaffirmed his earlier opinion that "wherever large numbers of similar ornaments occur in numismatics, the explanation for them is almost always chronological in character"; he continued to maintain that the fifty to sixty known varieties of ornament combination probably reflect an annual change of marks over the fifty- to sixty-year duration of the reigns of Basil II, Constantine VIII, and, perhaps, Romanus III.[15]

A comprehensive study has confirmed that the criteria used by Metcalf to form typological groupings were valid but that the conclusions he drew were not. Ivanisevic analyzed a large quantity of Class A folles found within a wide geographical area and concluded that the attempt to attribute a specific regional source is mistaken. The types exist, however, and appear to be of chronological rather than geographical significance. Ivanisevic has recently identified five chronological divisions based on Metcalf's various criteria.[16]

There is a natural tendency among archaeologists to take coins at face value. Coins offer a convenient hook on which to hang associated and superimposed material culture, but they are all too often misleading.[17] The significance of a coin ultimately depends

7. *Corinth* XI, p. 178, nos. 2 (C-37-1239), 3 (C-37-2269), pp. 188–189, nos. 99 (C-37-2268), 114 (C-37-2267), p. 194, no. 176 (C-37-1323), p. 196, no. 186 (C-37-686).

8. The coins are Corinth NB 163, p. 62 [26 April 1937], coin no. 6, and Corinth NB 163, p. 170 [11 June 1937], coins nos. 1–10 (nine disintegrated).

9. South Stoa Middle, Corinth NB 152, p. 24 [16 May 1936]. Contents: C-36-190 (Early Slip-Painted Ware). Coins nos. 1–44: Anon. Class B (1030/35–1042), 2; Class C (1042–1050), 1; Class D (1050–1060), 1; Class E (1060), 1; Class F (1060–1065), 24; Class H (1070–1075), 12; Class I (1075–1080), 1; and two survivors: 1 9th century and 1 Roman. Coins nos. 45–63: Anon. Class F, 4; Class H, 13; Class J (1080–1085), 1; Nicephorus III (1078–1081), 1.

10. *Corinth* XI, p. 214, no. 406 (C-36-573), fig. 51:c, pl. 19:b.

11. "And he [John Tzimisces] ordered also the image of the savior to be engraved on the nomisma and the obol [i.e., follis], which had not been done before this. And Greek letters were engraved on the other side to about this effect: Jesus Christ, King of Kings. And the emperors who succeeded him did likewise": *Cedrenus, II.413–414.

12. *Agora* *II, pp. 73–74, 109–115.

13. Grierson *1973, pp. 634–706, and *1982, pp. 204–210.

14. Metcalf 1973, pp. 199–219.

15. Grierson *1973, p. 644, and *1982, p. 207.

16. Ivanisevic *1989.

17. Contamination of deposits is unlikely to occur during careful excavation and perhaps happens most frequently as a result of human errors in recording, cleaning, and study. Corinth has long had a system of checks, which reduces such errors to a minimum. For many years, including those that generated the material for the major contributions up to 1967, there was a system that rewarded workmen for coins found in excavation. It was not unusual to find Byzantine coins in otherwise uncontaminated earlier strata; this phenomenon is now best explained by the seeding (for a bounty) of coins found while working the fields rather than the improbable theory of "percolation" that was once favored.

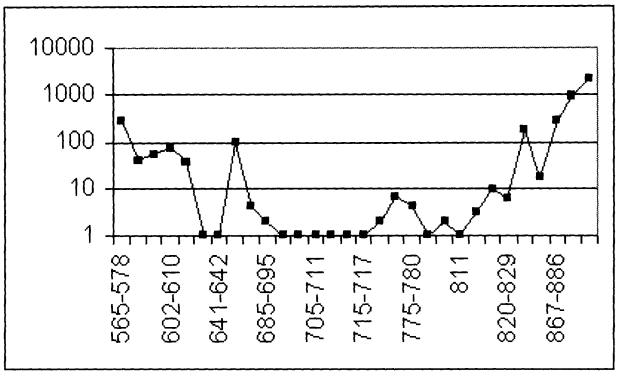

FIGURE 23.1. *Coin losses, mid 6th to mid 10th century*

on the circumstances of its association. While it may have been lost within months of its issue, more likely the coin remained in circulation over a period of several years, even decades, before deposition. Equally, there is a real possibility that a coin is a redeposited survivor—for coins, like pottery, are very resilient.[18]

In this regard I would cite a series of five red earth floors and a fill associated with a Late Roman house overlying an earlier mosaic, which were excavated in the summer of 1996. Twenty-five coins were found in these strata; of these, one disintegrated, one was illegible, three were ancient Greek, two were early Roman, twelve belonged to the second half of the 4th century A.C., and seven were unidentified issues of the 4th or 5th century. The deposits were initially dated to ca. 400 because the coarsewares of the period are still not perfectly understood. In this case a better estimate of date, in the mid 5th century, was eventually possible thanks to a solitary coin of Valentinian III (425–455), found on the earliest earth floor of the building.[19] In this sequence at least 95% of the associated coins were survivors or had been many years in circulation when lost.

The number of numismatic finds at Corinth varies considerably with time. Figure 23.1 shows coin finds by reign from the mid 6th to mid 10th century plotted on a logarithmic scale (see also Table 23.1). Silver and gold coins of all periods are practically nonexistent, although, oddly, silver makes up a relatively large proportion of the exceedingly rare finds of the late 7th to mid 9th centuries. Coppers of the 10th century, certain anonymous folles, and signed folles of Nicephorus III are all common, as are 12th-century coins. Much has been made of the peaks and valleys in the quantities of coins by issue to illustrate developments in Corinth's condition. For some scholars

TABLE 23.1. TABLE OF COIN LOSSES[20]

Justin II (565–578)	279
Tiberius II (578–582)	42
Maurice (582–602)	55
Phocas (602–610)	70
Heraclius (610–641)	36 [7]
Constantine III (641)	—
Heraclonas (641–642)	—
Constans II (642–668)	96 [23]
Constantine IV (668–685)	4
Justinian II (685–695)	2
Leontius (695–698)	—
Tiberius III (698–705)	1
Justinian II (705–711)	?
Philip (711–713)	—
Anastasius II (713–715)	—
Theodosius III (715–717)	—
Leo III (717–741)	2
Constantine V (741–775)	7
Leo IV (775–780)	4
Constantine VI (780–802)	1
Nicephorus I (802–811)	2
Stavricius (811)	—
Michael I (811–813)	3
Leo V (813–820)	10
Michael II (820–829)	6
Theophilos (829–842)	161
Michael III (842–867)	18
Basil I (867–886)	278
Leo VI (886–912)	972
Constantine VII (913–959)	2,285

the virtual absence of Dark Age coins signified desertion and for others the large numbers of Nicephorus III's folles represented old denominations demonetized and discarded after the Alexian reform in 1092.[21] Other interpretations are possible.

The quantity of coin losses, and hence the number recovered by excavation, is governed by commonly accepted principles.[22] The more coins of a type that have been minted, the more there are to be lost; large and valuable coins are more likely to be picked up again when dropped; and finally, changing political and economic conditions affect patterns in circulation of individual issues. It is now thought by some Byzantinists—for instance, Hendy—that the Dark Age economy was virtually anumismatic on a local level, hence the paucity of coin finds. If so, then a large

18. According to Crummy and Terry (*1979, pp. 50–51, fig. 22) the latest coins in the late-4th-century A.C. layers studied at Portchester constituted only 5% of the total while 45% belonged to the first half of the 4th century.

19. Panayia Field, coin 1996-244. Lots 1996-41, 1996-39, and 1996-40 came from the floors above the coin.

20. Includes counts of coins from the card index at Corinth, which were added to *Corinth* VI, pp. 125–136, 165; Edwards 1937; Harris 1941; Williams and Fisher 1971, pp. 47–48; 1972, p. 184; 1973, p. 43; 1975, pp. 47–48; 1976, pp. 159–160; Williams, MacIntosh, and Fisher 1974, pp. 46–76; Fisher 1980, pp. 26–27; Williams and Zervos 1982, pp. 158–159; 1983, p. 43; 1985, p. 94; 1986, pp. 199–200; 1987, pp. 41–42; 1988, p. 140; 1989, p. 46; 1990, p. 364; 1991, p. 49; 1992, pp. 183–184; 1993, p. 43; MacIsaac 1987 and in preparation. Figures in brackets refer to coins from Acrocorinth; see *Corinth* III, i, p. 66.

21. Hendy *1969, pp. 48–49; Metcalf *1979, p. 73.

22. Casey *1986, pp. 68–79.

FIGURE 23.2. *Byzantine pottery types*

1. White Ware Polychrome cup (C-75-15)
2. White Ware pedestal dish (C-37-1656)
3. Light on Dark Slip-Painted I (C-1989-12)
4. Early Sgraffito (C-1990-11)
5. Green and Brown Painted I (C-35-318)
6. Spatter Painted (C-1990-6)
7. Light on Dark spotted (C-36-403)
8. Green and Brown Painted Spiral Style (C-31-6)
9. Dark on Light Slip-Painted (C-36-584)
10. Measles Ware (C-1990-26)
11. Developed Style Sgraffito (C-30-56)
12. Painted Sgraffito (C-36-583)
13. Light on Dark Slip-Painted II (C-37-808)
14. Green and Brown Painted III (C-36-847)
15. Medallion-Style Sgraffito (C-29-5)
16. Developed-Style Sgraffito (C-37-1179)
17. Free-Style Sgraffito (C-36-1500)
18. Incised (C-34-1386)
19. Intermediate-Style Incised–Sgraffito (C-37-1539)
20. Champlevé (C-34-57)
21. Frankish Incised–Sgraffito (C-39-122)
22. Green and Brown Painted IV (C-37-1788)
23. Slip-Painted III (C-34-1249)
24. Painted Incised–Sgraffito (C-38-235)
25. Aegean Ware (C-1977-3)
26. Zeuxippus Ware (C-33-360)

4

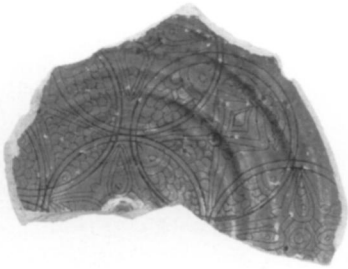

5

6

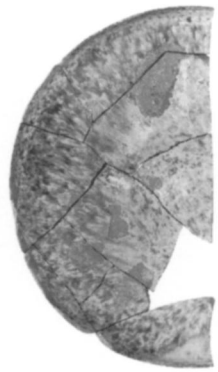

10

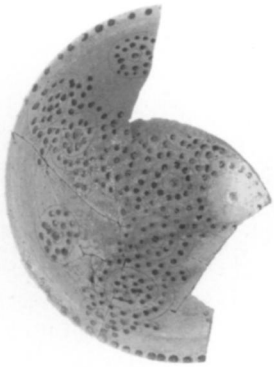

11

12

16

17

18

22

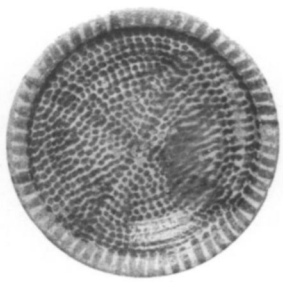

23

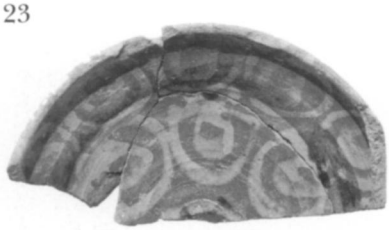

24

25

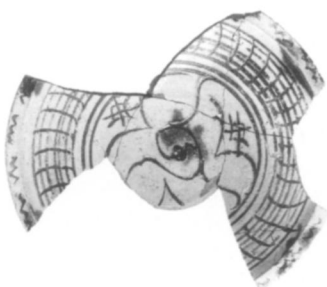

26

TABLE 23.2. TABLE OF CONTEXT COINS AND HOARDS

	C41	*H30*	*H28*	*H29*	*C42*	*C81*	*H25*
John II (1118–1143)	1	12	—	—	—	—	—
Alexius I (1092–1118)	9	4	45	5	1	—	—
Class K (1085–1092)	6	4	14	1	4	—	—
Class J (1080–1085)	1	4	3	1	—	1	—
Nicephorus III (1078–1081)	11	7	11	2	3	1	—
Class I (1075–1080)	10	—	3	2	—	1	—
Class H (1070–1075)	—	1	5	2	1	25	4
Constantine X (1059–1067)	—	6	—	—	—	—	—
Class G (1065–1070)	—	9	—	—	—	—	—
Class F (1060–1065)	—	—	—	1	—	28	—
Class E (1060)	—	—	—	—	—	1	74
Class D (1050–1060)	—	—	—	—	1	1	—
Class C (1042–1050)	—	—	—	—	—	1	—
Class B (1030/35–1042)	—	8	—	—	—	2	—

C = coin context H = hoard
C41 = Corinth NB 171, p. 161
C42 = Corinth NB 177, p. 157
C81 = Corinth NB 152, p. 24

proportion of tax and petty exchange was transacted in kind, and military or other services rewarded by certain privileges pertaining to land use. At Corinth the effects of a movement toward monetary payments for tax, goods, and services seem to be evident as early as the mid 9th century. The rate of remonetization was not consistent throughout the empire; thus in the 11th century Bulgarians were reassured that grain and wine would remain acceptable currency in lieu of coin for tax payments. To answer the suggestion that old issues of Nicephorus III were demonetized, one can cite several deposits and hoards at Corinth which indicate that old folles may have remained in local circulation for several decades after their supposed withdrawal. The first five columns of Table 23.2 represent post-reform hoards and deposits. As is clear from the first column, C41, the deposit apparently postdates the reform by at least twenty-six years and yet no less than 28 of the 38 coins are of the old module.

Having sketched very briefly numismatic problems and developments in the Byzantine period, I would like to return to ceramic chronology, for which the Corinth excavations have proved so important. Within five years of publication, the comments on White Ware imports of the 10th and 11th century put forward by Morgan in *Corinth* XI were made almost obsolete by Stevenson's work of 1947 on the ceramics from the Great Palace excavations in Constantinople. The publication of the Saraçhane Cami excavation, also in Istanbul, has now superceded both these earlier works.[23] Revision of aspects of the 13th- and 14th-century material published by Morgan has been effected by numerous articles[24] and planned volumes. The dating and typology of pottery attributed to the early 9th to mid 12th centuries have only recently been reappraised. This study of Corinthian material involves a complete reexamination of the stratigraphy and contents in all the old contexts available to Morgan as well as several deposits excavated since 1959. As a control, almost fifty deposits were subjected to statistical applications such as quantification, similarity analysis, and seriation.[25] The results have provided new insights into the development of shapes, decorative styles, and materials. Sketched with a broad brush, the history of later glazed pottery at Corinth is as follows.

The earliest lead-glazed vessels are mortaria dated by their contexts and parallels to the late 6th century. A glazed bowl from a pit at the west end of the Forum has been recognized by Slane as a type belonging to the second half of the 7th century.[26] There is no further evidence for glazed ceramics of any kind until the late 8th century, when importation of small quantities of Constantinopolitan White Wares commenced and then ceased almost immediately. Local production of glazed pottery, principally chafing dishes, began only in the 9th century. These chafing dishes seem to emulate the form and petal decoration of Italian examples, such as those found in the Crypta Balbi excavations in Rome (Fig. 23.3:4).[27]

White Ware imports from Constantinople resume in the second half of the 10th century. Their numbers increase steadily through the 11th century until they finally dominate the glazed-ware market. The imports include chafing dishes, dishes on tall and low

23. Stevenson *1947; *Saraçhane* *II.

24. At Corinth this is mainly the result of work by C. K. Williams, Director Emeritus of the excavations. See MacKay 1967; Sanders 1987, *1989, *1993; Williams 1977a, 1978a, 1993a; and Williams and Zervos 1988, 1990, 1991, 1992, 1993, 1994, 1995, 1996. There is also a useful report from the Athenian Agora: see Shear *1984. Particular groups of wares as defined by decorative style have supplemented Morgan's own groups: see Megaw *1968, *1975, and *1989.

25. Sanders 1995.

26. C-73-238.

27. Romei *1992, p. 380, nos. 2–4.

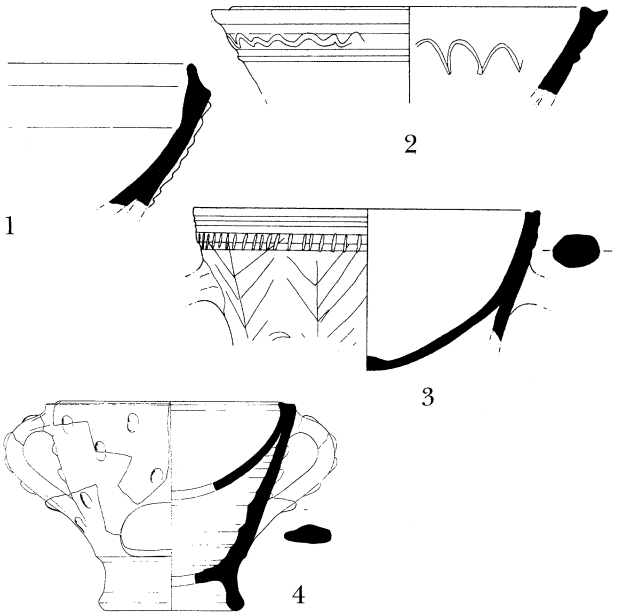

FIGURE 23.3. *Chafing dishes*
(1) Local late 9th century, C-38-383; (2) early 10th century, C-1977-264; (3) late 11th century, C-63-565a; (4) after Crypta Balbi, Rome (Romei *1992, fig. 2: late 8th to early 9th century)

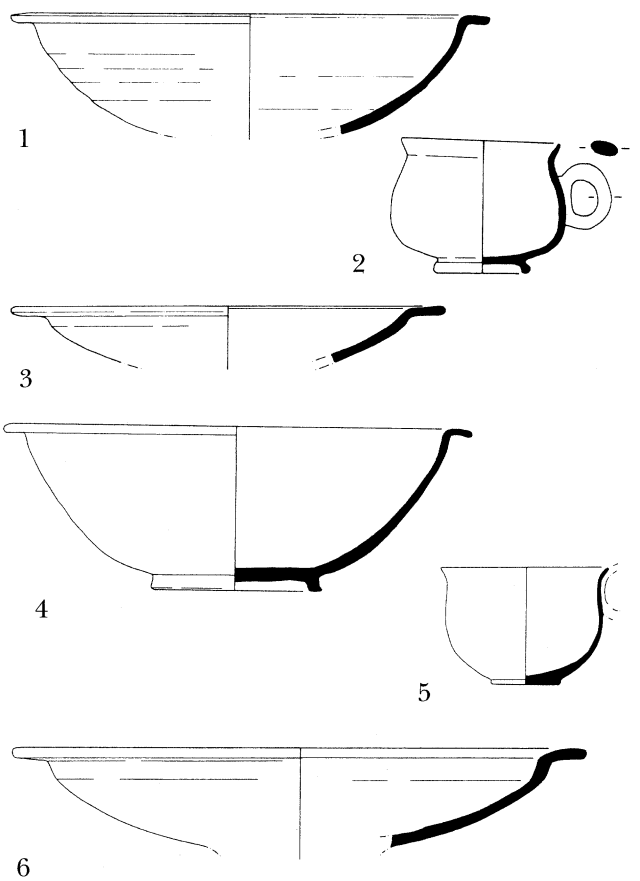

FIGURE 23.4. *Polychrome White Ware*
(1) C-67-6; (2) C-75-15; (3) C-33-627
Local Red Wares
(4) C-36-1178; (5) C-1989-4; (6) C-36-996

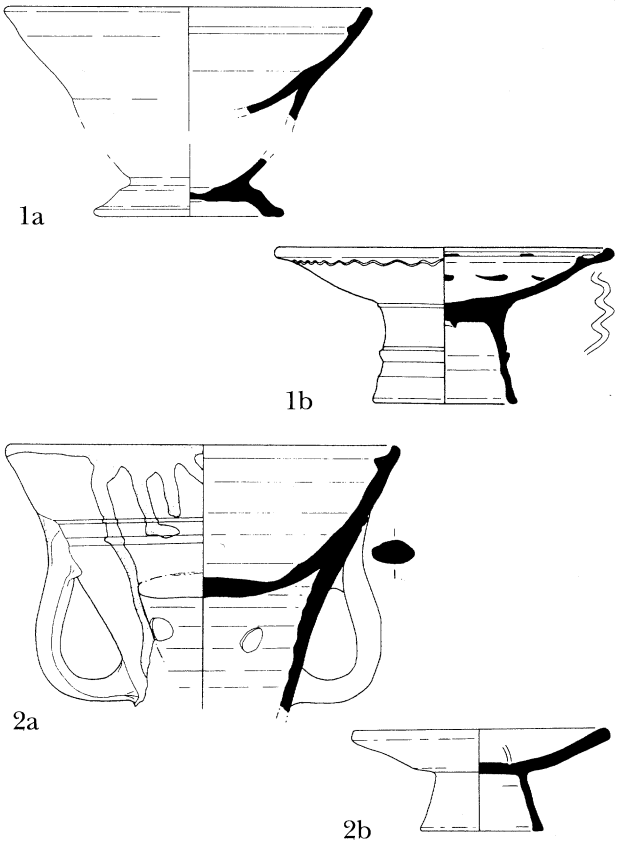

FIGURE 23.5. *White Wares*
(1a) composite of C-33-384 (rim) and C-38-212 (base); (1b) C-1977-254
Local Red Wares
(2a) C-37-1239; (2b) C-37-735

pedestals, large bowls, and cups. Green glaze, though less common than yellow at Constantinople, is in the majority at Corinth, where yellow-glazed pieces often cover a red slip decoration, which is sometimes also incised. The various types of Polychrome White Wares—usually misdated, with their revetment plaque equivalents, to the late 9th or 10th century—are the finest ceramic imports of the 11th century (Figs. 23.2:1, 23.4:1–3).[28]

From the mid 10th century, locally manufactured chafing dishes and some coarsewares approximately imitate the forms of the imported White Wares (Fig. 23.5). The local industry is otherwise conservative, limiting its production to chafing dishes, pitchers, cups, and pilgrim flasks. Initially these vessels were dipped in a solution of yellow glaze, producing a dark, thick, glossy finish over the red- or black-fired biscuit. Later the potter resorted to an inferior but quicker technique, described by the monk Heraclius, which called for lead oxide flux to be sprinkled onto the surface before firing.[29] In all but a few cases the use of glaze in this period, at least for locally produced vessels,

28. Sanders *forthcoming.
29. de Bouard *1974, p. 69.

TABLE 23.3. TABLE OF GLAZED POTTERY STYLES THROUGH TIME

Unit	*14*	*15*	*16*	*17*	*18*	*19*	*20*	*21*	*22*	*23*	*24*	*25*	*26*	*27*	*28*
Decoration															
Aegean Ware	—	—	—	—	—	—	—	—	—	—	—	—	—	—	—
Zeuxippus Ware	—	—	—	—	—	—	—	—	—	—	—	—	—	—	—
As Fig. 23.2:24	—	—	—	—	—	—	—	—	—	—	—	—	—	—	—
As Fig. 23.2:23	—	—	—	—	—	—	—	—	—	—	—	—	—	—	—
As Fig. 23.2:22	—	—	—	—	—	—	—	—	—	—	—	—	—	3.9	—
As Fig. 23.2:21	—	—	—	—	—	—	—	—	—	—	—	—	1.3	—	—
As Fig. 23.2:20	—	—	—	—	—	—	—	—	—	—	—	—	—	—	—
As Fig. 23.2:19	—	—	—	—	—	—	—	—	—	—	—	—	—	—	—
As Fig. 23.2:18	—	—	—	—	—	—	—	—	—	—	—	—	—	—	4.5
As Fig. 23.2:17	—	—	—	—	—	—	—	—	—	—	—	—	—	2.9	—
As Fig. 23.2:16	—	—	—	—	—	—	—	—	—	—	—	—	—	6	27.5
As Fig. 23.2:15	—	—	—	—	—	—	—	—	—	—	—	—	—	10.4	15.9
As Fig. 23.2:14	—	—	—	—	—	—	—	—	—	—	—	—	21.2	13	2.3
As Fig. 23.2:13	—	—	—	—	—	—	—	0.1	—	—	0.4	—	7.4	10.8	6.3
As Fig. 23.2:12	—	—	—	—	—	1.2	—	1.4	—	0.6	3.6	—	4	5.5	3
As Fig. 23.2:11	—	—	—	—	—	1.2	1.1	2.4	—	9.9	33.4	29.7	46.9	12.1	15.8
As Fig. 23.2:10	1.6	—	—	—	—	0.5	—	2.6	10.8	28	26.7	28.3	6.2	4.4	9.3
G. and B. II/III	—	—	—	—	0.2	—	—	—	8.6	16.6	1.1	5.6	—	3.9	—
As Fig. 23.2:9	—	—	—	—	—	—	—	6.8	12.1	8	5.8	3	1.3	5.9	—
As Fig. 23.2:8	—	—	—	1.5	—	—	—	8.6	10.5	—	1.8	1.4	—	5.6	—
As Fig. 23.2:7	—	—	—	5	2.3	3	—	0.1	—	—	—	2.9	—	—	2.3
As Fig. 23.2:6	—	—	0.6	—	—	7.2	1.8	0.6	—	—	—	0.6	—	0.2	—
As Fig. 23.2:5	9.2	0.5	3.4	5.1	10.5	13.7	52	29.8	14	7.4	10	7.3	—	—	—
As Fig. 23.2:4	6.2	2.6	20.9	17.2	4.3	2.5	6.3	7.3	12	5.8	—	1.9	—	—	—
As Fig. 23.2:3	24.2	58.9	38.5	37.5	27.3	33.8	8.8	2.4	—	—	—	0.1	—	0.5	0.5
Plain gr. gl.	29.4	13.8	23.7	14	7.8	20.9	19.2	17.1	15.8	11.9	9	8.5	3.3	6.5	11.6
Plain y. gl.	5.4	2.7	1.6	6.2	2.7	9	0.5	4.1	8.7	2.4	8.2	6.8	6.1	5.8	—
Other	24	21.5	11.3	13.5	44.9	6.8	10.3	17.3	7.5	9.4	0.8	3.9	22.3	2.6	1
	—	—	—	—	—	—	—	—	—	—	—	—	—	—	—

Weight as percentage of all glazed pottery.

Ca. 1085/1095 to 1110/1120:
Unit 14 = Lots 1990-12 and 1990-13; coins (1070–1075) 1
Unit 15 = Lot 1989-63; coins (1078–1081) 2, (1070–1075) 1
Unit 16 = Lots 1990-54 and 1990-55; coins (1078–1081) 5
Unit 17 = Lots 1990-9, 1990-10, and 1990-11; coins (1078–1081) 1
Ca. 1110/1120 to 1120/1130:
Unit 18 = Lot 5117
Unit 19 = Lot 1989-16; coins (1092–1118) 1
Unit 20 = Lot 1990-4
Ca. 1120/1130 to ca. 1160:
Unit 21 = Lot 1989-15; coins (1092–1118) 1, (1085–1092) 1
Unit 22 = Lot 1992-87
Unit 23 = Lot 1989-73; coins (1143–1181?) 1
Unit 24 = Lot 1989-8; coins (1092–1118) 1, (1085–1092) 1
Unit 25 = Lot 1989-5; coins (1143–1181) 1

29	*30*	*31*	*32*	*33*	*34*	*35*	*36*	*37*	*Decoration*
—	—	—	—	5.2	—	—	16.2	52	Aegean Ware
—	—	—	—	—	—	11.7	1.3	1.7	Zeuxippus
—	—	3.8	4.1	0.6	—	0.6	3.1	4.7	As Fig. 23.2:24
—	—	—	5	—	—	—	1.8	—	As Fig. 23.2:23
—	—	0.8	6.5	13.7	54.2	61.5	37	11	As Fig. 23.2:22
—	—	29.9	33.9	25	—	—	0.9	2.5	As Fig. 23.2:21
—	—	23.9	25.6	41.7	21.3	—	3.6	—	As Fig. 23.2:20
—	8.3	4.9	—	—	—	—	—	—	As Fig. 23.2:19
10.6	13.3	—	7.3	—	—	—	0.8	—	As Fig. 23.2:18
21.8	46.5	10.9	7.3	1.7	9.3	—	—	3.2	As Fig. 23.2:17
1.3	13	0.8	4.1	8.4	—	—	3.2	1.2	As Fig. 23.2:16
20.3	6.1	1.3	2.9	—	0.6	1.3	0.6	—	As Fig. 23.2:15
—	—	—	1.2	—	—	—	0.4	1.9	As Fig. 23.2:14
—	—	—	—	0.4	—	—	—	1.2	As Fig. 23.2:13
—	—	—	—	—	—	—	—	—	As Fig. 23.2:12
6.6	—	1.7	—	1.8	—	—	—	—	As Fig. 23.2:11
7	1.2	1	—	—	—	—	0.8	—	As Fig. 23.2:10
—	—	0.8	—	—	—	—	0.5	—	G. and B. II/III
—	—	—	—	—	—	—	1.2	—	As Fig. 23.2:9
—	—	—	—	1.1	—	—	0.5	—	As Fig. 23.2:8
—	—	—	—	—	—	—	—	—	As Fig. 23.2:7
—	—	—	—	—	—	—	—	—	As Fig. 23.2:6
1	—	—	—	—	—	—	—	—	As Fig. 23.2:5
—	—	—	—	—	—	—	0.3	—	As Fig. 23.2:4
—	—	—	—	—	—	—	—	—	As Fig. 23.2:3
—	—	4	0.5	—	3.5	14.8	4.8	9.5	Plain gr. gl.
19	6.1	13	0.2	0.2	10.7	9.6	14.5	6.5	Plain y. gl.
12.4	5.5	3.2	1.4	0.2	0.4	0.5	8.5	4.6	Other
—	—	—	—	—	—	—	—	—	

Ca. 1160 to ca. 1200:
Unit 26 = Lot 1976-245; coins (1092–1118) 4
Unit 27 = Lot 418; coins (1092–1118) 16, (1118–1143) 1
Unit 28 = Box 102 (Corinth NB 144, p. 47)
Unit 29 = Lot 489
Unit 30 = Lot 488; coins (1143–1181) 16, ?Bulgarian imitative 1 [contamination?]
Ca. 1200 to ca. 1260:
Unit 31 = Lot 89; coins (1143–1181) 4
Unit 32 = Lot 292
Unit 33 = Lot 88; coins (1143–1181) 15, (1085–1095) 1, Latin imitatives 5
Unit 34 = Lot 1987-7; coins Latin imitatives 10, (1245–1250) 1
Unit 35 = Lot 1986-26
Unit 36 = Lot 1977-11; coins Latin and Bulgarian imitatives 13
Unit 37 = Corinth lot 316, coins (1143–1181) 1, Latin and Bulgarian imitatives 5

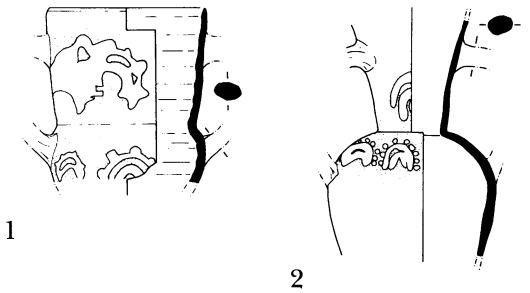

FIGURE 23.6. *Local Slip-Painted unglazed* (1) C-37-2292; (2) C-37-2293

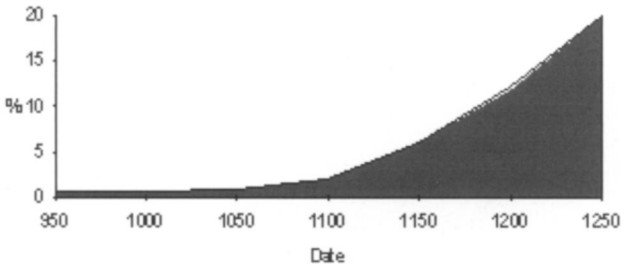

FIGURE 23.7. *Glazed pottery.* Weight as percentage of all glazed pottery

suggests an interest in waterproofing the surface rather than in creating an attractive effect.

Early in the reign of Alexius I, at the end of the 11th century, the import of White Wares effectively stopped and there was a morphological and decorative revolution in the Corinthian industry.[30] The rare local chafing dishes still imitate Constantinopolitan types but rapidly disappear. Shapes formerly available only in White Ware, especially Polychrome, such as large bowls, cups, and dishes, are made in local fabrics for the first time (Fig. 23.4). Local potters used a white slip not only for linear slip-painted decoration applied directly to the biscuit under the glaze but also as a plain background for painted and incised decoration (Figs. 23.2:3, 23.6).[31] This technique permitted potters to exploit glaze color in a manner similar to that used on White Wares and marks a transition in the use of glaze from the purely functional to the partly decorative. The earliest phases of this technological innovation at Corinth can be dated in the last decade or two of the 11th century. The change cannot yet be recognized at other major cities in southern Greece, such as Sparta or Thebes, let alone at lesser centers, until the second quarter to middle of the 12th century, when Slip-Painted II, Dark on Light Slip-Painted, later Green and Brown Painted, Measles, and especially various Sgraffito styles come to the fore (Fig. 23.2:7–12; Table 23.3: deposits 21–30).

The place of glazed pottery in the earlier assemblages should not be exaggerated. In Figure 23.7[32] the average weight of glazed pottery is correlated with date. Glazed wares make up less than 0.7% by weight of 10th- and 11th-century pottery; many of these, if not the majority, are sherds from local chafing dishes, which are glazed only on the interior of the bowl and show little or no trace of glaze on the stand. In later contexts the proportion increases rapidly to about 2% at the beginning of the 12th century, 6% in the mid 12th century, and about 20% in the mid 13th century.

Such pottery studies demonstrate the great value of a large-scale excavation undertaken over a period of many years. Had excavations at Corinth ceased in the late 1930s or even the 1980s it is doubtful whether *Corinth* XI could ever have been supplemented and updated. Studies also demonstrate the continued dependence of archaeological survey on excavated material for dating and interpreting surface finds. My own interpretation of published and much unpublished survey material is that none of the claimed 8th- to 11th-century glazed pottery, with the exception of material from several sites on Melos and one on the Strymon Delta, dates earlier than the late 11th to mid 12th century.[33] Furthermore, one wonders whether the increase in Middle Byzantine sites identified by survey is related to the greater quantity and visibility

30. The changes are stylistic, functional, technical, technological, and probably social. This upgrading of technology may reflect underlying changes in the local economy. See Blake *1980 and Orton *1985.

31. Light on Dark predates Dark on Light Slip-Painted (Imitation Lustre) by about fifty years and apparently continues a local tradition of linear slip-painted decoration on unglazed burnished pitchers, for instance MacKay 1967, p. 282, no. 73 (C-59-88), which is 11th century.

32. Source lots:

Mid 10th century: lot 1977-47, 0.6%

Late 10th to early 11th century: lot 1991-82, 0.5%; lot 1977-34, 0.07%

Late 11th century: lot 1990-57, 0.90%

Ca. 1085/1095 to 1110/20: lot 1990-13, 1.3%; lot 1989-63, 1.02%; lot 1990-9, 1.1%; lot 1990-10, 2.56%; lot 1990-11, 1.1%; lot 1990-54, 3.16%

Ca. 1120/1130 to 1160: lot 1989-73, 5.1%; lot 1989-8, 6.4%; lot 1990-51, 7.6%

Mid 13th century: lot 1986-26, 22.4%; lot 1987-17, 21.2%; lot 1986-21, 22.5%.

33. Material personally examined includes pottery from the Skorta survey, the Strymon Delta survey, the Lakonia survey, the Nemea Valley survey, and the Melos survey. Works with illustrated pottery that can be independently assessed include Armstrong *1989 (Phokis), *1996 (Lakonia); Cherry, Davis, and Mantzourani *1991 (Kea); Pikoulas *1988 (Megalopolis); and Sutton *1990 (Nemea valley). It is not yet possible to appraise claims made for the Argolid, Pylos, or Boiotia surveys.

of glazed pottery and not to the growth in rural population and to the number of sites, as is so often assumed.[34]

Numerous questions arise from this revision. For example, what can be said about the manufacture and distribution of Byzantine pottery? Do trends in imports relate to more general economic and political processes in the Aegean region? Is the revolutionary change in local pottery styles a product of the economic policies of Alexius I or an indirect result of sixty years of coinage devaluation during which currency apparently lost three-quarters of its former value? Why does this change apparently happen in Corinth at least thirty years earlier than in other southern Greek cities and fifty years earlier than in rural districts? Can a reappraisal of the old excavations in the light of what we now know lead to a new understanding of Corinth's size, economy, and development? This is not the place, nor is there sufficient space, for my putative solutions. Having sketched the pottery development, however, I will conclude by adding provisional amendments to the accounts of Finley, Scranton, and Bouras with regard to the last question.

The belief that the Corinthian Forum continued to serve as the central administrative area and marketplace into the Byzantine period has been generally accepted but is certainly open to debate. It now seems that changes in the Forum's function began at the end of the 4th century, when the Central Shops were remodeled into a broad staircase uniting the upper and lower terraces of the Forum. A new city wall, the course and date of which could stand further scrutiny, was erected well within the old. With the ascendance of Christianity the major religious buildings and cemeteries that have come to light were located at the periphery of the city, outside the new city wall.[35]

By the mid 6th century the city center had completely shed all vestiges of its original role. Two events may have brought this transformation about with sudden finality: a devastating earthquake, perhaps in 522, and the great plague of 542, which, as Procopius states, followed soon after.[36] Not everything was completely destroyed, for belt buckles and coins demonstrate that the Kraneion basilica, the basilica of Haghios Kodratos, and parts of the Lechaion harbor basilica, a possible mortuary chapel in the Asklepieion, and a church on Acrocorinth continued to be used well into the 7th century.[37]

Bath buildings of the period can also be identified. Excavations in the Panayia Field southeast of the Forum from 1995 to 1997 have exposed a small bath (see Biers' article above, pp. 314–317 and Fig. 18.14), richly appointed with opus sectile floors and marble wall veneer, which can be dated with certainty to the second quarter or middle of the 6th century. In the early 7th century it seems to have been used for domestic purposes, perhaps related to the large dump of amphoras and domestic pottery found 30 m to the southwest in 1997. On the basis of the plan of the bath and the style of the construction, a bath at Zevgolatio originally thought to be much earlier and an unpublished bath west of the Odeum at Corinth can be recognized as 6th-century structures.[38]

At this time the abandonment of the Corinthian Forum as a place of business is evident, and we must now acknowledge that the statue base once thought

34. Mannoni and Mannoni (*1975), followed by Blake (*1978), suggest that the increase in number of Italian sites yielding good-quality pottery—for instance North African Red Slip or glazed wares—in certain periods reflects penetration of cheap ceramics (often mass-produced wares distributed by efficient trade networks) into rural populations that, for various reasons, had newly acquired disposable income over and above subsistence requirements. This argument directly challenges the precepts on which many discussions of survey finds in Greece are based.

35. *Corinth* XVI, pp. 5, 9–26. Restoration of the West Shops' colonnade by the emperors Valentinian and Valens has been dated to possibly after 383, but a 366/7 date is to be preferred: see *Corinth* VIII, iii, p. 166, no. 504 (I-43+), and Williams 1977a, p. 63. Gregory (1979, pp. 268–272) dates the Late Roman wall to the first quarter of the 5th century while a dedication (*Corinth* VIII, i, p. 141, no. 245 [I-276]) to "Theodosius, renovator of Corinth," by the quarriers, carters, and marble workers may refer to Theodosius II (408–450).

36. *Procopius, *Aed.* IV.2.24: "For [the fortifications] had fallen into ruin long before at Corinth because of terrible earthquakes which had visited the city"; *Procopius, *Anec.* XVIII.41–44: "And earthquakes destroyed . . . Corinth . . . and afterwards came the plague as well . . . which carried off about one half the surviving population." See *Cedrenus II.838. The plague was followed by a completely separate series of earthquakes in the general area of central Greece in A.D. 551/2. These affected Achaea, Boiotia, and the region of the Alkionidon and Malia gulfs, destroying "countless towns and eight cities," among which Chaironeia and Koroneia, both in western Boiotia, Patras and Naupaktos, both at the west end of the Corinthian Gulf, and Echinos and Skarpheia on the Malia Gulf are enumerated. Although this series of earthquakes is generally thought to have severely damaged Corinth, there is no supporting evidence whatsoever to suggest that the city was affected. Procopius (**Goth.* VIII.16–25) describes the later earthquakes in central Greece. See also Finley 1932, p. 478.

37. The belt buckles, which were once thought to be early, can now be dated with certainty to the mid 7th century: Weinberg (*Corinth* XII, p. 267) dates the type to the 4th or 5th century, but Russell (*1982, p. 139, fig. 7:14–16) considers them to be ca. 600–650. Furthermore, a buckle in Mausoleum G of the Kraneion basilica was found in a tomb with two coins of Constans II; see Pallas *1981, p. 298 and note 18. See Stikas 1966, p. 56, for a coin of Phocas found in the Kodratus basilica; *Corinth* XIV, p. 169, for coins of Constans II in the Lerna springhouse; and *Corinth* III, i, pp. 21, 61–66, for the Acrocorinth finds.

38. See Sanders 1999 for the Panayia Bath, and Charitonidis and Ginouvès *1955 for the Zevgolatio bath.

to honor Constans II belongs to a much earlier Constantine.[39] The paucity of habitation and the presence of many vaulted tombs containing Corinthian-type buckles show that the area was given over to burials in the 7th and 8th centuries.[40] These graves indicate either that the prohibition of burial within the city, evidenced by imperial edicts[41] and extramural funerary churches, had lapsed, or that a new city wall had been constructed which excluded the Forum. The city proper may have been confined to a *kastro,* part of which can be tentatively traced immediately to the east of the Forum.[42]

Compared with Byzantine Athens, a relatively insignificant city but about which we know a certain amount,[43] the major monuments of Corinth are poorly documented. Indeed, it is clear that much of Corinth, including its great civil and religious structures, remains to be unearthed. Recent excavation into Roman levels indicates that the areas west, south, and southeast of the Forum were sparsely settled while the north and east quadrants were fairly built up. Outside this urban core were scattered suburban or even semirural dwellings. In the late 12th century, Choniates records that the city had two harbors and that the lower city, or "emporion," which was prosperous from trade, was below the *kastro.*[44] The fact that in the early 13th century the Franks found the lower town fortified with towers and a circuit wall is seldom reported.[45] This fortification, of uncertain date but plausibly the *kastro* cited by Choniates, is perhaps the late antique defensive wall that followed the line of the natural terraces to the east of the Forum.

By the 10th century there were forty settlements in the Peloponnese that merited the name polis, as opposed to komopolis, and a distinct ranking is evident. Of all these Corinth was preeminent, with Patras, Sparta, and Argos having prominent but strictly local importance. These poleis were the centers of local administration, supporting local, centralized markets and craft specialization; here were merchants, craftsmen and porters, warehouses, shops, and small factories. Reurbanization in the 10th century and particularly in the 11th century helped to stimulate the development of a sophisticated market economy that provided both an outlet and a collection place for rural surpluses. By the late 11th century Corinth was one of the places where the Venetians gathered Peloponnesian produce, especially oil and silks, for export. Presumably these had been purchased, either at fairs or directly from landowners, by agents such as that of Romano Mairano, who dominated the oil market of Corinth, Sparta, and Thebes from 1165 to 1171.[46]

According to the *Geography of Edrisi,* Corinth was "large and flourishing."[47] There is practically no literary information that would indicate the size of Byzantine towns, and the formulae used by various scholars to estimate numbers vary greatly according to taste.[48] An estimate of ca. 200,000 inhabitants for mid-11th-century Constantinople is considered a reasonable number. Corinth, a theme capital with a *kastro,* an archbishop, a military headquarters, and strong trade contacts may therefore have had little more than about 10,000 inhabitants in the 12th century.[49]

The produce of the Peloponnese in the Frankish period may give some idea of the wealth in the preceding period. These were wheat and barley for local consumption, wine and raisins, olives and oil, cloth and raw wool, flax and silk, red dye and valonia,

39. Feissel and Philippidis-Braat *1985, p. 271; *contra Corinth* VIII, iii, p. 169, no. 510 (I-2143), and Kent 1950, among others.

40. Many of the burials contain belt buckles: *Corinth* XII, nos. 2192–2196 (MF-431, MF-2624, MF-5419, MF-7066, MF-7092); Davidson 1937, p. 232, fig. 3; Williams, MacIntosh, and Fisher 1974, p. 11, no. 8 (MF-69-89); Robinson 1976a, p. 222, pl. 57:a; also Corinth MF-486, MF-4996, MF-7937, C-72-192. These can now be dated with confidence: Ajbabin *1984; Ambroz *1971a and *1971b, summarized in Bortoli-Kazanski and Kazansky *1987.

41. For example, **CIC,* Digest 47.12.3, no. 5.

42. This wall and a tower, standing about 4 m high and retaining the natural terrace, was observed by the author in the mid 1980s in a trench excavated by the Greek Archaeological Service 200 m to the east of the Lechaion Road entrance to the Forum. Since no westward continuation of this wall has been found in excavations by the American School, a logical reconstruction of its circuit would have the wall turning south immediately to the east of the excavated area and incorporating the wall east of and constructed from blocks from the Julian Basilica.

43. The Metropolitan occupied the cella, opisthodomos, and pronaos of the Parthenon, Saint George's similarly reoccupying the Hephaisteion and the Erechtheion church and the Theotokos: Franz *1968, pp. 201–204; Travlos *1971, p. 576, fig. 456, p. 263, fig. 335. Saint John Mangouti (ded. 871): *Agora* *XXIV, p. 124. The Kapnikarea (mid 11th century), Haghioi Theodoroi (third quarter of the 11th century), Haghioi Apostoloi (first quarter of the 11th century), Sotira Lykodemou (first quarter of the 11th century), the Moni Petraki (10th century), and lesser churches: Xyngopoulos *1929. The Archbishop resided within the metropolitan palace, which occupied the propylaia of the Acropolis: Herrin *1975, p. 261. The names of several quarters of the city are known, and Michael Choniates gives some idea of the crafts practiced at the end of the 12th century: *M. Choniates, 99.

44. *N. Choniates, II.74–75.

45. *Chronicle of the Morea,* lines 1461–1462. An exception is Bouras *1981, p. 618.

46. Thiriet *1959, pp. 39, 47–48.

47. Jaubert *1936–1940, pp. 122–126.

48. Bryer *1986b, pp. 270–271.

49. In the early 19th century the largest Peloponnesian towns, Tripolis and Patrae, each had populations of about 10,000 to 12,000 (2,500 houses or households): see Sanders and Whitbread *1990, p. 352.

cheese, honey and wax, cattle, horses, sheep, pigs, and leather.[50] In addition to these agronomic products, there was certainly local trade in manufactured goods. As agglomerated settlements grew, so did the numbers of specialized craftsmen. In Macedonia, the number of craftsmen doubled between the 11th and 13th centuries. In decreasing order of numbers, communities there were served by shoemakers, blacksmiths, tailors, weavers, potters, woodcutters, fishermen, and millers.[51] By analogy with a 14th-century Macedonian village of two hundred households,[52] Corinth at its apogee in the later 11th century and the 12th century may have employed as many as 230 cobblers and 70 potters and assistants in twenty pottery workshops.

The quarter supplanting the Forum was a relatively late development. The large quantities of low-denomination coins of the late 9th to 11th century in this area suggest, however, that monetized commercial activity, perhaps in the form of an *emboropanegyri*, or fair, had commenced before domestic and commercial construction started in earnest. Most of the buildings illustrated in plan VII of *Corinth* XVI (see also Fig. 25.1) that belong to the 12th to early 14th centuries are mixed together in an almost incomprehensible scramble. Excavation since 1959 has helped to clarify the plans of Corinth's Byzantine houses. These include fairly simple halls with an upper story supported by an arch springing from pilasters as well as houses in which the rooms are arranged around a small central courtyard.[53] Documentary sources give us a good idea of the contents of these houses,[54] but the archaeological record preserves only what was left behind: mainly sherds of tableware and storage vessels and minor household items. Depending on the circumstances of abandonment, most unbroken objects of value such as pithoi and furniture would have been salvaged while organic objects would have perished. Workshops have also come to light that suggest that manufacturing was on a scale closer to that of a cottage than a factory industry. We seem to have overestimated the number of pottery factories in the area of the Forum excavations to date, for only the kiln buried by the monastery of Saint John can be called with any certainty a workshop. On the other hand, there is now ample evidence for pottery production further afield: for glazed pottery near the Asklepieion in the mid 12th century, for amphora production just north of Hadji Mustafa in the 10th and 11th centuries. Glazed, cooking, and plain wares, including amphoras, were also made on the saddle between Acrocorinth and Penteskouphia in the same period. In addition to the historically attested churches of Christ and Saint Theodore, both inside the city, there are also the visible remains of five small medieval churches. The Bema church and one inside the Peirene fountain are plausibly 10th or 11th century, the churches on Temple Hill and south of the museum are 12th-century foundations, while the monastery of Saint John is Frankish.[55]

With tight chronological control of the pottery, dating from the 9th to 14th centuries, with a developing idea of the extent of the city, and with new data on Byzantine and Frankish building forms, it should one day be possible to begin unscrambling the composite plans published by Scranton in *Corinth* XVI. Williams has already made some progress toward this end. It will also be possible to answer old and to develop new questions about Corinth. Future work should take a variety of directions.

Despite considerable advances in Byzantine numismatics, many knotty problems still exist. The attribution and order of issue of the Anonymous Class A folles and of copper coins ascribed to the long reigns of Alexius I, John II, and Manuel I are far from clear, despite the monumental recent contributions of Grierson and Hendy. In this regard, Corinth, with its vast number of stratified coins, presents a distinct advantage for research over most private and museum collections. Corinth's cabinet of coins represents an archaeological reality unbiased by a collector's taste for the very fine or very rare.

It is also desirable to get a better idea of the extent of the Byzantine city—this can only be achieved by excavation away from the established center of research in the past one hundred years. Further excavation of Corinth will present an opportunity to examine finds from the upper levels and to test the data and hypotheses presented here. A continuation of the well-established association with scientists and anthropologists is not just desirable but essential. It is clear that the advances of the past three decades have served to illustrate how much more there is still to learn and how much more Corinth has to offer to all those who study Greece's patrimony, both ancient and modern.

50. Richard *1985, pp. 289–290.

51. Lefort *1993, p. 111.

52. The village of Radolibos, in the early 14th century, supported between four and seven cobblers' workshops employing 23 shoemakers. In the same small village there were two potters' workshops, one with three and the other with two craftsmen.

53. Robinson 1966; Williams 1977a, 1978a; Williams and Fisher 1975; Bouras *1983, pp. 6–8.

54. Oikonomides *1990; Koukoules *1948–1955 and *1950.

55. Robinson 1976a, p. 222. *Corinth* XVI, pp. 38–39, 42–46, 54–55, 61–66, 71–73. The accepted date of some of these structures has been questioned by Williams and Zervos (1992, pp. 133–137), while the church on Temple Hill must be Middle Byzantine rather than Late Roman (I thank Charles K. Williams for this information).

REFERENCES

Agora II= M. Thompson, *Coins from the Roman through the Venetian Period,* Princeton 1954.

Agora XXIV = M. A. Franz, *Late Antiquity,* A.D. *267–700,* Princeton 1988.

Ajbabin, A. I. 1984. "Problemy hronologii mogilnikov Krima pozdnerimskogo perioda," *SovArch* 1984, pp. 104–122.

Ambroz, A. K. 1971a. "Problemy rannesrednevekovoj hronologii vostočnoj Evropy," *SovArch* 1971.2, pp. 96–123 [trans. 1972, *Soviet Anthropology and Archaeology* 10, pp. 331–390].

———. 1971b. "Problemy rannesrednevekovoj hronologii vostočnoj Evropy," *SovArch* 1971.3, pp. 106–132 [trans. 1973, *Soviet Anthropology and Archaeology* 11, pp. 254–305].

Armstrong, P. 1989. "Some Byzantine and Later Settlements in Eastern Phokis," *BSA* 84, pp. 1–42.

———. 1996. "The Byzantine and Ottoman Pottery," in *The Lakonia Survey* II: *Continuity and Change in a Greek Rural Landscape,* ed. W. Cavanagh, J. Crouwel, R. W. V. Catling, and G. Shipley, London, pp. 125–140.

Bakirtzis, C. 1989. *Βυζαντινά Τσουκαλολάγηνα,* Athens.

Blake, H. McK. 1978. "Medieval Pottery: Technical Innovation or Economic Change?" in *Papers in Italian Archaeology,* ed. H. McK. Blake, T. W. Potter, and D. B. Whitehouse, Oxford, pp. 435–473.

———. 1980. "Technology: Supply or Demand?" *Medieval Ceramics* 4, pp. 3–12.

Bortoli-Kazanski, A., and M. Kazansky. 1987. "Les sites archéologiques datés du IVe au VIIe siècle au nord et au nord-est de la mer Noire: État des recherches," *TravMém* 10, pp. 437–490.

Bouras, C. 1981. "City and Village: Urban Design and Architecture," *JOB* 31, pp. 611–653.

———. 1983. "Houses in Byzantium," *DChAE* 11, pp. 1–26.

Bryer, A. 1986a. "Byzantine Agricultural Implements," *BSA* 81, pp. 45–80.

———. 1986b. "The Structure of the Late Byzantine Town: *Dioikismos* and *Mesoi,*" in *Continuity and Change in Late Byzantine and Early Ottoman Society,* ed. A. Breyer and H. Lowry, Washington, pp. 263–279.

Casey, J. 1986. *Understanding Ancient Coins,* London.

Cedrenus = I. Bekker, ed., *George Cedrenus, Historiarum Compendium,* 2 vols., Bonn 1938–1939.

Charitonidis, S., and R. Ginouvès. 1955. "Bains romains de Zevgolatio près de Corinthe," *BCH* 79, pp. 102–120.

Cherry, J. F., J. L. Davis, and E. Mantzourani. 1991. *Landscape Archaeology as Long-Term History: Northern Keos in the Cycladic Islands,* Los Angeles.

Choniates, M. = S. Lambros, ed., *Μιχαήλ Ἀκομινάτου τοῦ Χωνιάτου: Τὰ σωζόμενα,* Athens 1879–1880.

Choniates, N. = L.-L. Van Dieten, ed., *Nicetae Choniatae Historia,* Berlin 1975.

Chronicle of the Morea = J. Schmitt, ed., *The Chronicle of the Morea,* London 1904.

CIC = P. Krueger and T. Mommsen, eds., *Corpus iuris civilis* I: *Institutiones et digesta,* Berlin 1859.

Crummy, P., and R. Terry. 1979. "Seriation Problems in Urban Archaeology," in *Pottery and the Archaeologist* (Institute of Archaeology Occasional Publication 4), ed. M. Millett, London, pp. 49–60.

de Bouard, M. 1974. "Observations on the Treatise of Eraclius, De coloribus et artibus Romanorum," in *Medieval Pottery from Excavations: Studies Presented to Gerald Glough Dunning,* ed. V. I. Evison, H. Hodges, and J. G. Hurst, London, pp. 67–76.

Deroche, V., and J.-M. Spieser, eds. 1989. *Recherche sur la céramique byzantine* (*BCH* Suppl. 18), Paris.

Evans, H. C., and W. D. Wixom, eds. 1997. *The Glory of Byzantium: Art and Culture of the Middle Byzantine Era,* A.D. *843–1261,* New York.

Feissel, D., and A. Philippidis-Braat. 1985. "Inventaires en vue d'un recueil des inscriptions historiques de Byzance III: Inscriptions du Péloponnèse," *TravMém* 9, pp. 267–395.

Franz, M. A. 1968. "From Paganism to Christianity in the Temples of Athens," *DOP* 19, pp. 185–206.

Grierson, P. 1973. *Catalogue of the Byzantine Coins in the Dumbarton Oaks Collection* III.2: *Leo III to Nicephorus III, 717–1081,* 2 vols., Washington, D.C.

———. 1982. *Byzantine Coins,* London.

Harvey, A. 1989. *Economic Expansion in the Byzantine Empire, 900–1200,* Cambridge.

Hendy, M. F. 1969. *Coinage of Money in the Byzantine Empire, 1081–1261,* Washington, D.C.

Herrin, J. 1975. "Realities of Byzantine Provincial Government: Hellas and Peloponnesos, 1180–1205," *DOP* 29, pp. 253–284.

Ivanisevic, V. 1989. "Interpretation and Dating of the Folles of Basil II and Constantine VIII: The Class A2," *Zdornik Radova Vizantolo kog Istituta* 27–28, pp. 19–41.

Jaubert, J. A. 1936–1940. *La géographie d'Edrisi,* 2 vols., Paris.

Koukoules, P. 1948–1955. *Βυζαντινῶν βίος καὶ πολιτισμός,* vols. 1–6, Athens.

———. 1950. *Θεσσαλονίκης εὐσταθίου τὰ λαογραφικά,* vols. 1–2, Athens.

Laiou-Thomadakis, A. E. 1977. *Peasant Society in the Late Byzantine Empire: A Social and Demographic Study,* Princeton.

Lefort, J. 1993. "Rural Economy and Social Relations in the Countryside," *DOP* 47, pp. 101–113.

MacIsaac, J. D. In prep. "Corinth Coins, 1928: The Theater and the Athena Trench."

Mannoni, L., and T. Mannoni. 1975. "La ceramica del medioevo all'eta moderna nell'archeologia di superficie della Liguria centrale e orientale," *Albisola* 8, pp. 121–136.

Megaw, A. H. S. 1968. "Zeuxippus Ware," *BSA* 63, pp. 67–88.

———. 1975. "An Early Thirteenth-Century Aegean Glazed Ware," in *Studies in Memory of David Talbot Rice,* ed. G. Robertson and G. Henderson, Edinburgh, pp. 34–45.

———. 1989. "Zeuxippus Ware Again," in Déroche and Spieser *1989, pp. 259–266.

Metcalf, D. M. 1979. *Coinage in South-Eastern Europe, 820–1396,* London.

Oikonomides, N. 1990. "The Contents of the Byzantine House from the Eleventh to the Fifteenth Century," *DOP* 44, pp. 205–214.

Orton, C. 1985. "Diffusion or Impedance: Obstacles to Innovation in Medieval Ceramics," *Medieval Ceramics* 9, pp. 21–34.

Pallas, D. I. 1981. "Données nouvelles sur quelques boucles

et fibules considérées comme avares et slaves et sur la Corinthe entre le VIe et le IXe s.," *Byzantino Bulgarico* VII, pp. 295–318.

Pikoulas, G. A. 1988. *Ἡ νότια μεγαλοπολιτικὴ χώρα ἀπὸ τόν 8ο π.Χ. ὥς τόν 4ο μ.Χ. αἰώνα*, Athens.

Procopius, *Aed.* = H. B. Dewing, trans., *Procopius,* vol. VII: *Buildings,* Cambridge, Mass., 1959.

Procopius, *Anec.* = H. B. Dewing, trans., *Procopius,* vol. VI: *Anecdota,* Cambridge, Mass., 1960.

Procopius, *Goth.* = H. B. Dewing, trans., *Procopius,* vols. III–V: *De bello gothica,* Cambridge, Mass., 1953–1960.

Richard, J. 1985. "Agricultural Conditions in the Crusader States," in N. P. Zacor and and H. W. Hazard, *A History of the Crusades* V: *The Impact of the Crusades on the Near East,* Madison, pp. 251–294.

Romei, D. 1992. "La ceramica a vetrina pesante altomedievale nella stratigrafia dell'esedra della Crypta Balbi," in *La ceramica invetriata tardoantica e altomedievale in Italia,* ed. L. Paroli, Florence, pp. 378–387.

Russel, J. C. 1982. "Byzantine *Instrumenta Domestica* from Anemurium: The Significance of Context," in *City, Town, and Countryside in the Early Byzantine Era,* ed. R. L. Hohlfelder, New York, pp. 133–164.

Sanders, G. D. R. 1989. "Three Churches in the Peloponnese and Their Importance for Late 13th and Early 14th Century Pottery in the Eastern Mediterranean," in Déroche and Spieser *1989, pp. 189–199.

———. 1993. "Excavations at Sparta: The Roman Stoa, 1988–91, Preliminary Report, Part Ic: Medieval Pottery," *BSA* 88, pp. 252–286.

———. Forthcoming. "Byzantine Polychrome Pottery," in *Studies in Honour of A. H. S. Megaw,* ed. J. Herrin, M. Mullet, and C. Otten-Froux (*BSA* Suppl.), London.

Sanders, G. D. R., and I. K. Whitbread. 1990. "Central Places and Major Roads in the Peloponnese," *BSA* 85, pp. 333–361.

Saraçhane II = J. W. Hayes, *Excavations at Saraçhane in Istanbul* II: *The Pottery,* Princeton 1992.

Shear, J. P. 1936. "Analytical Table of Coins," *Hesperia* 5, pp. 123–150.

Shear, T. L. 1984. "The Athenian Agora: Excavations of 1980–1982," *Hesperia* 53, pp. 1–57.

Stevenson, R. B. K. 1947. "The Pottery (1936–37)," in *The Great Palace of the Byzantine Emperors,* London.

Sutton, R. F. 1990. "Ceramics of the Historic Period," pp. 646–659 in J. C. Wright, J. F. Cherry, J. L. Davis, E. Mantzourani, S. B. Sutton, and R. F. Sutton, "The Nemea Valley Archaeological Project: A Preliminary Report," *Hesperia* 59, pp. 579–659.

Thiriet, F. 1959. *La Romanie vénetienne au moyen âge: Le développement et l'exploitation du domaine colonial vénetien (XIIe–XVe siècles),* Paris.

Travlos, J. 1971. *Pictorial Dictionary of Ancient Athens,* New York.

Xyngopoulos, A. 1929. *Εὑρετήριον τῶν μεσαιωνικῶν μνημείων τῆς Ἑλλάδος* II: *Τὰ βυζαντινά καὶ τουρκικὰ μνημεῖα τῶν Ἀθηνών*, Athens.